HILLVIEW DESIGN COLLABORATIVE
CAIRNS RESIDENCE
425 RT 15, DANVILLE VERMONT
12.17.2020

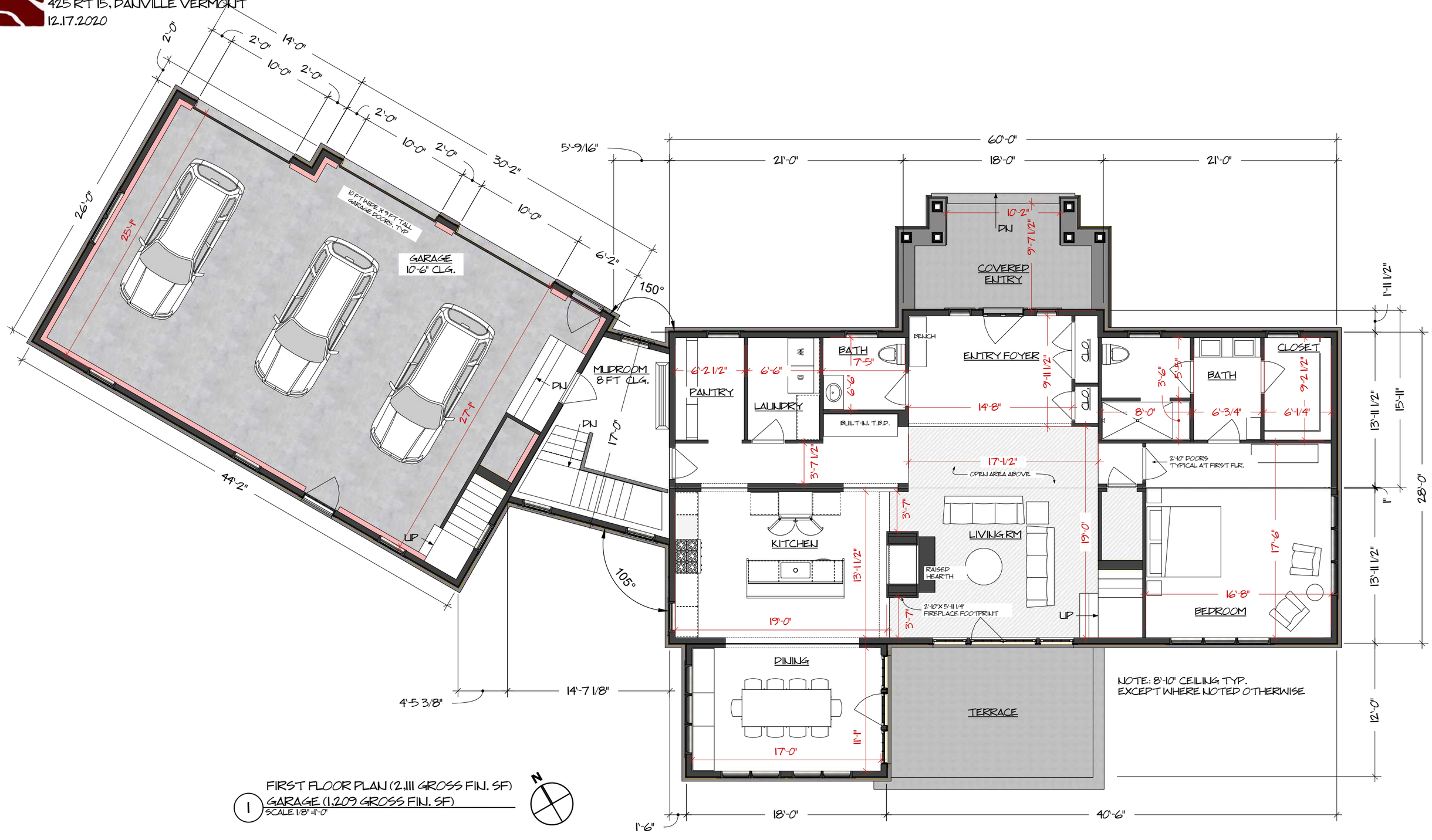

1 FIRST FLOOR PLAN (2,111 GROSS FIN. SF)
GARAGE (1,209 GROSS FIN. SF)
SCALE 1/8" =1'-0"

DRAFT VERSION NOT FOR CONSTRUCTION

FIRST FLOOR PLAN

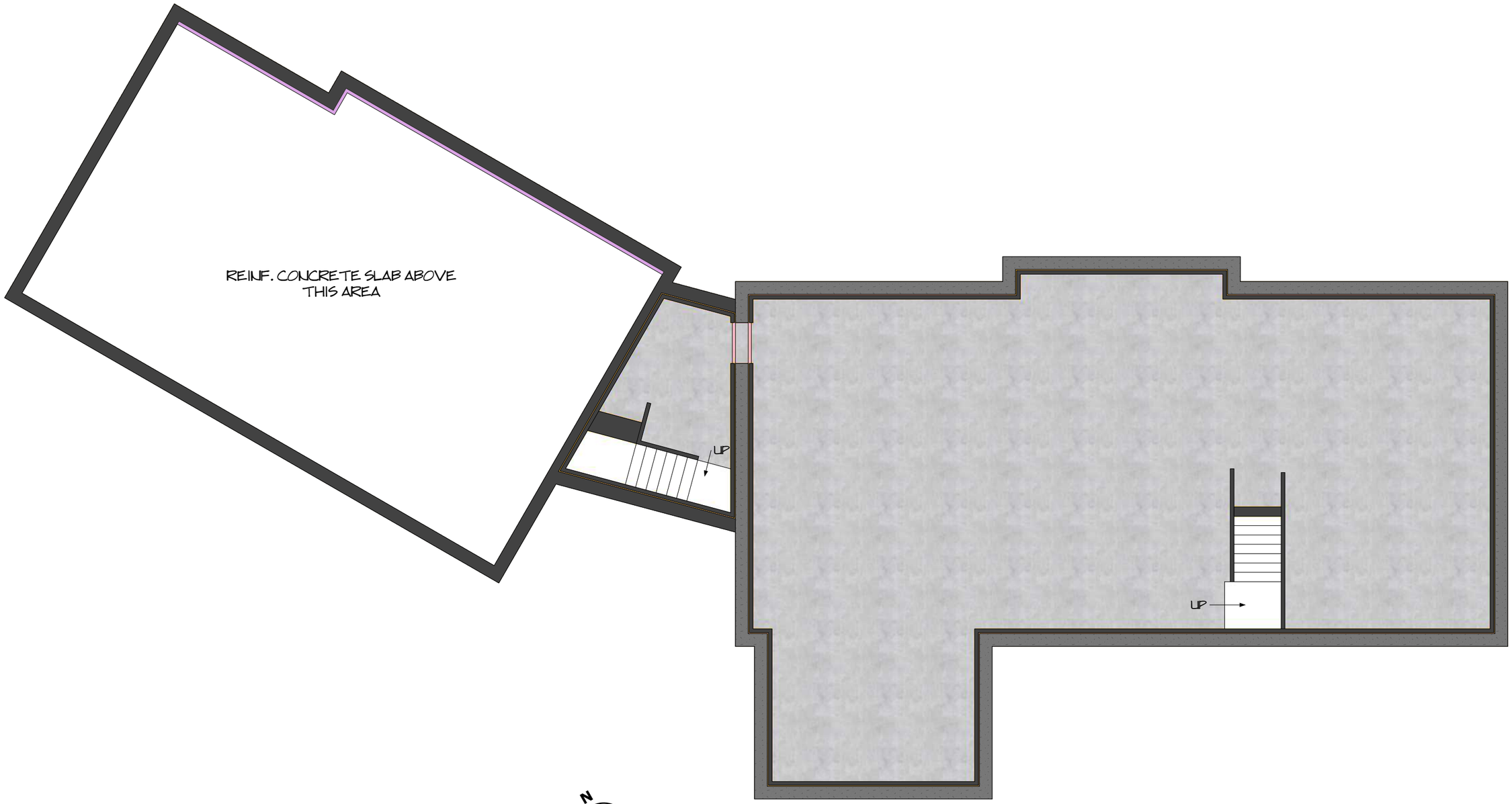

1 LOWER LEVEL PLAN
SCALE 1/8"=1'-0"

DRAFT VERSION NOT FOR CONSTRUCTION

LOWER LEVEL PLAN

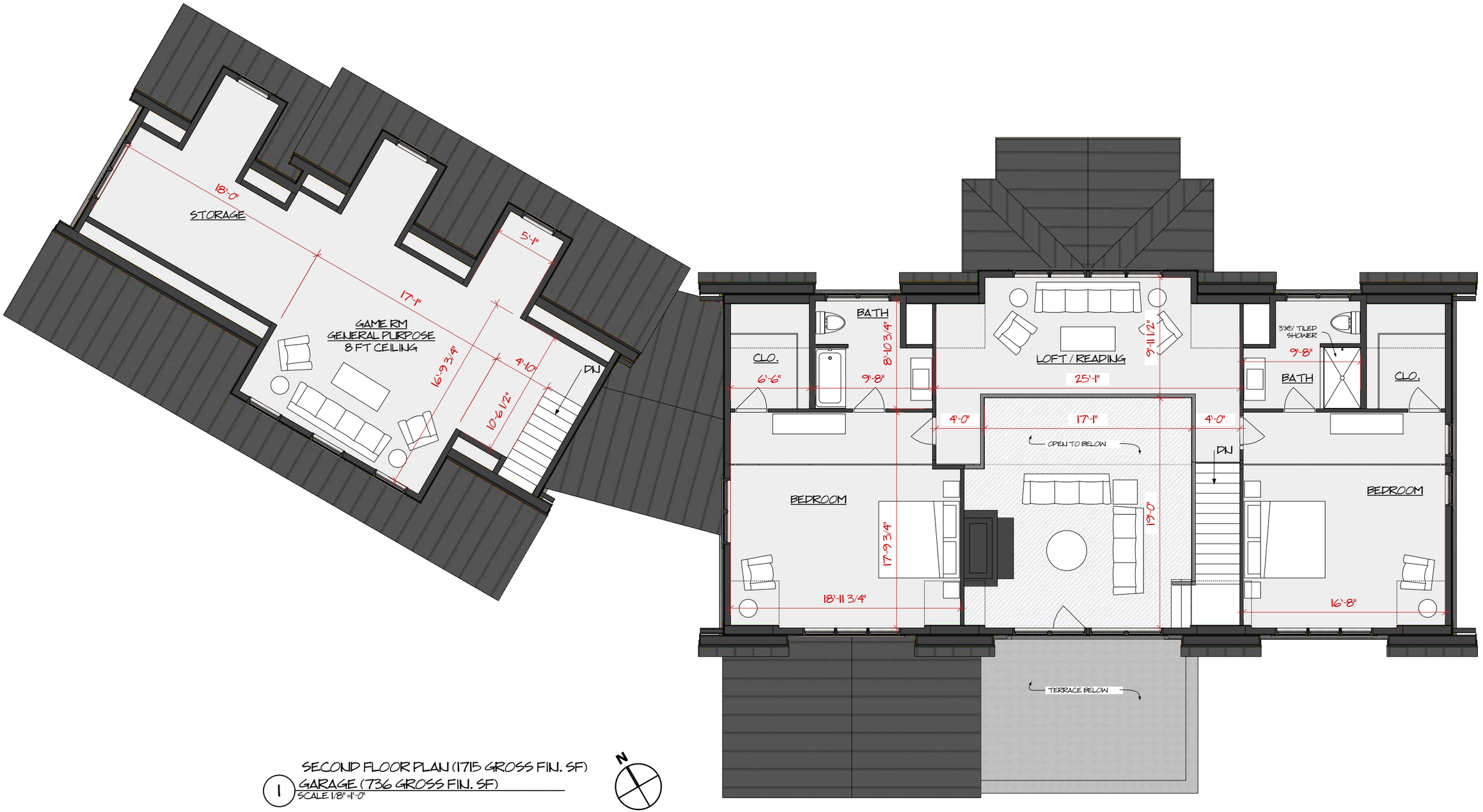

1 SECOND FLOOR PLAN (1715 GROSS FIN. SF)
GARAGE (736 GROSS FIN. SF)
SCALE 1/8" =1'-0"

DRAFT VERSION NOT FOR CONSTRUCTION

SECOND FLOOR PLAN

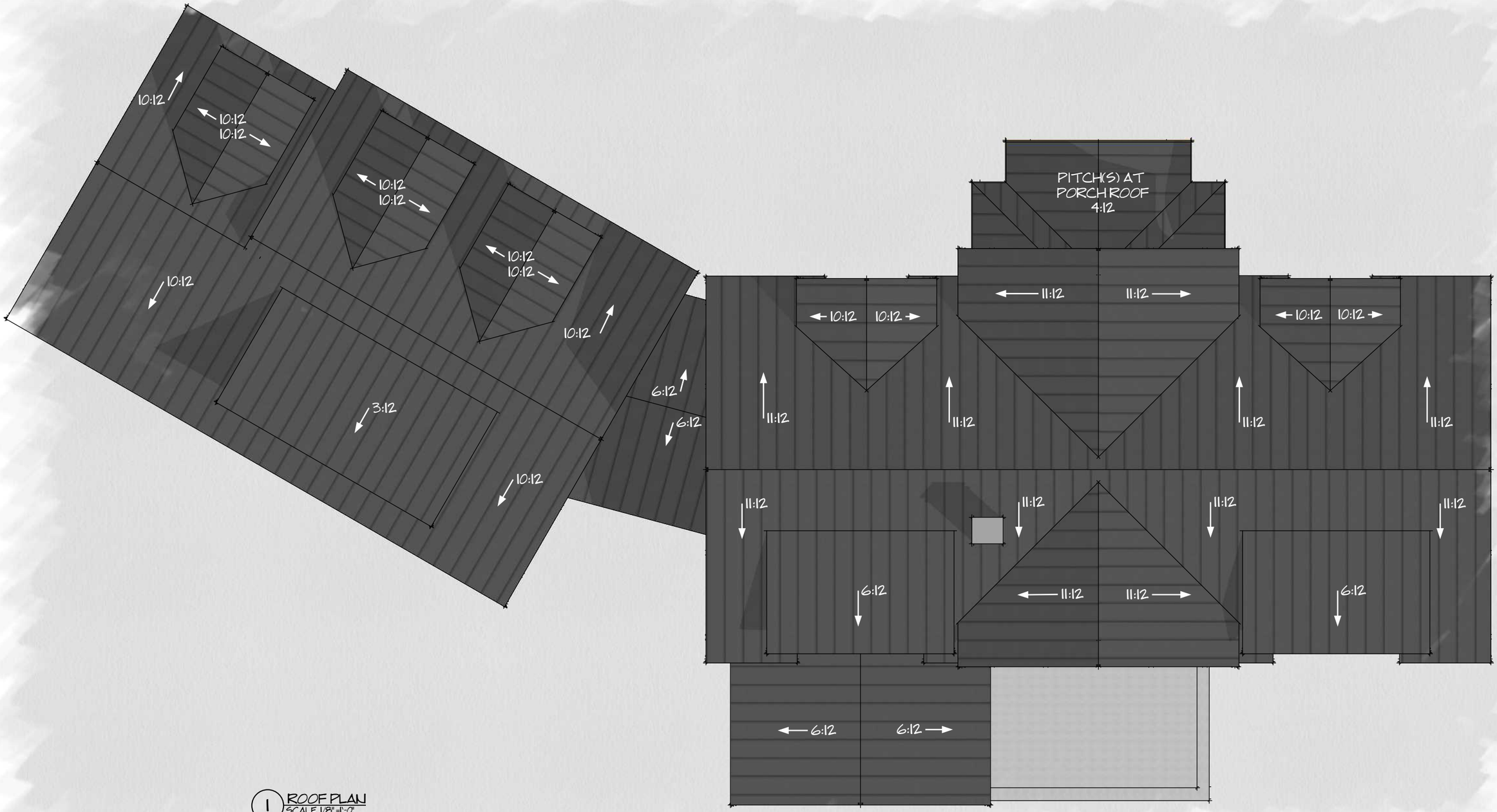

1 ROOF PLAN
SCALE 1/8" =1'-0"

DRAFT VERSION NOT FOR CONSTRUCTION

ROOF PLAN

1 SECTION LOOKING EAST
SCALE: 3/16" = 1'-0"

DRAFT VERSION NOT FOR CONSTRUCTION

SECTION LOOKING EAST

2 SECTION VIEW LOOKING EAST
NOT TO SCALE

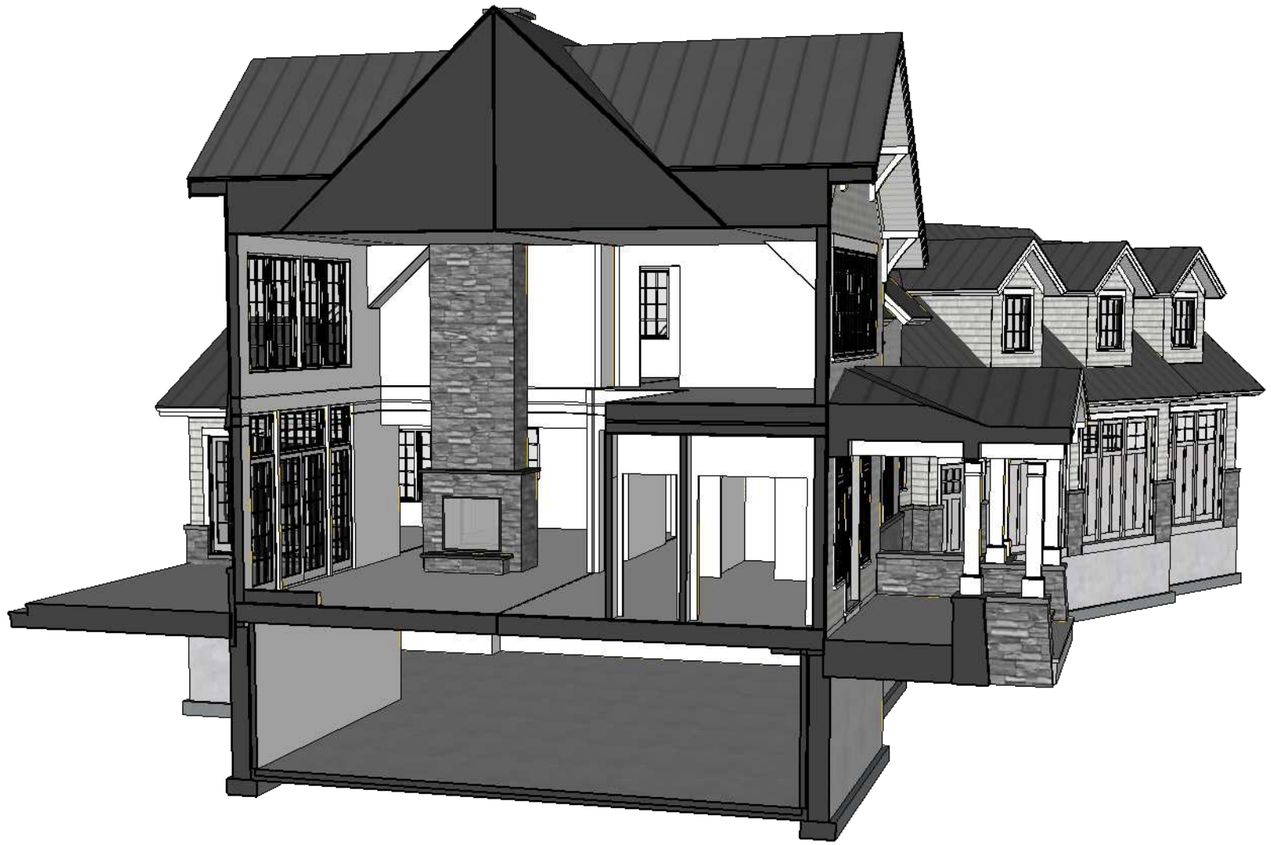

1 SECTION VIEW LOOKING WEST
NOT TO SCALE

DRAFT VERSION NOT FOR CONSTRUCTION

SECTION VIEW

1 SECTION AT GARAGE
SCALE: 3/16" = 1'-0"

DRAFT VERSION NOT FOR CONSTRUCTION

SECTION AT GARAGE

1 SECTION VIEW AT GARAGE
NOT TO SCALE

DRAFT VERSION NOT FOR CONSTRUCTION

SECTION VIEW

1 NORTH ELEVATION
SCALE: 1/8" = 1'-0"

DRAFT VERSION NOT FOR CONSTRUCTION

NORTH ELEVATION

1 NORTH ELEVATION
SCALE: 3/16" = 1'-0"

DRAFT VERSION NOT FOR CONSTRUCTION

ENLARGED NORTH ELEVATION

1 GARAGE ELEVATION
SCALE: 3/16" = 1'-0"

DRAFT VERSION NOT FOR CONSTRUCTION

ENLARGED NORTH ELEVATION AT GARAGE

1 SOUTH ELEVATION
SCALE: 1/8" = 1'-0"

DRAFT VERSION NOT FOR CONSTRUCTION

SOUTH ELEVATION

1 SOUTH ELEVATION
SCALE: 3/16" = 1'-0"

DRAFT VERSION NOT FOR CONSTRUCTION

ENLARGED SOUTH ELEVATION

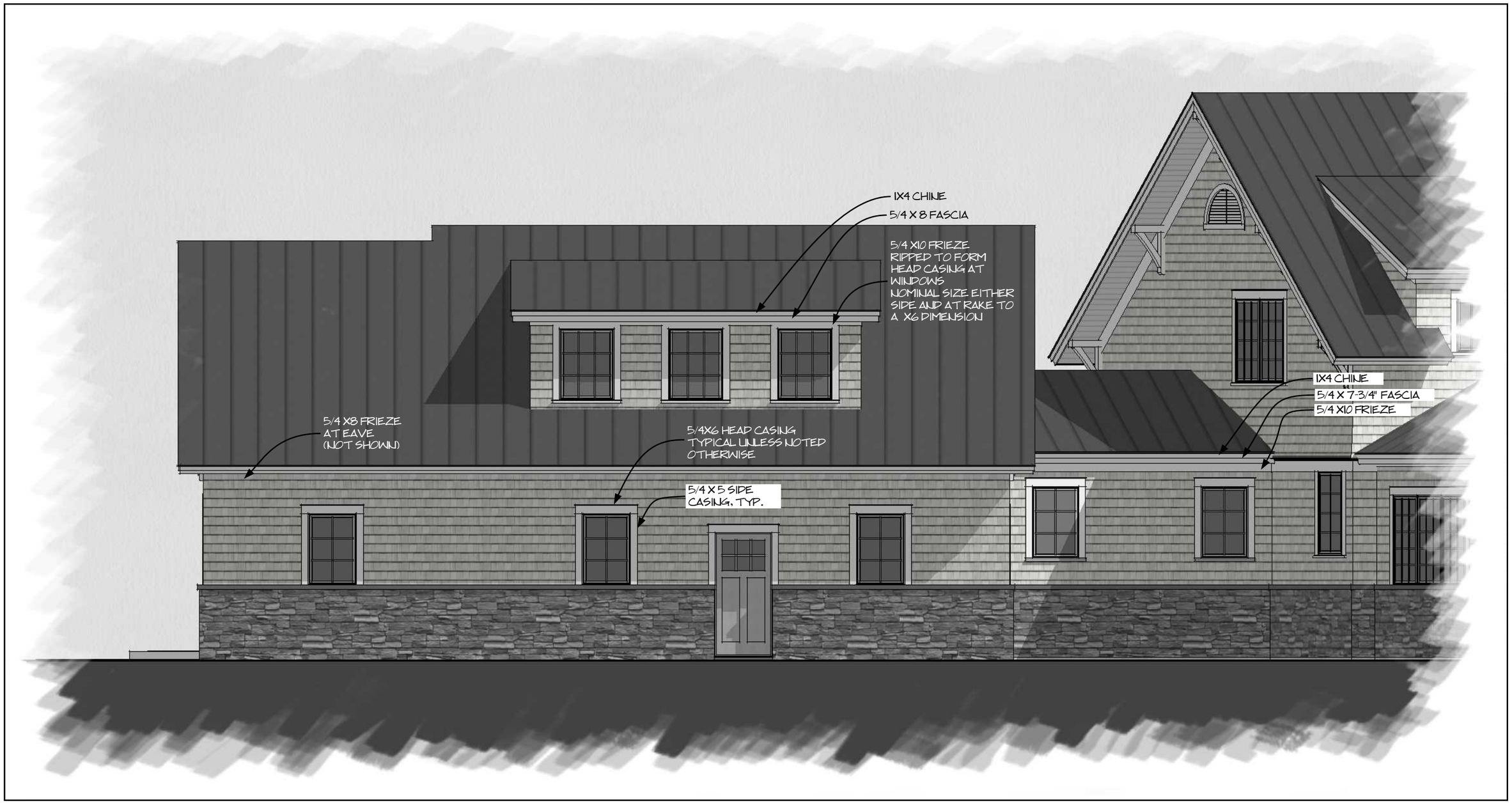

DRAFT VERSION NOT FOR CONSTRUCTION

ENLARGED SOUTH ELEVATION AT GARAGE

1 EAST ELEVATION
SCALE: 1/8" = 1'-0"

DRAFT VERSION NOT FOR CONSTRUCTION

EAST ELEVATION

1 EAST ELEVATION
SCALE: 3/16" = 1'-0"

DRAFT VERSION NOT FOR CONSTRUCTION

ENLARGED EAST ELEVATION

1 WEST ELEVATION
SCALE: 1/8" = 1'-0"

DRAFT VERSION NOT FOR CONSTRUCTION

WEST ELEVATION

1 WEST ELEVATION
SCALE: 3/16" = 1'-0"

DRAFT VERSION NOT FOR CONSTRUCTION

ENLARGED WEST ELEVATION

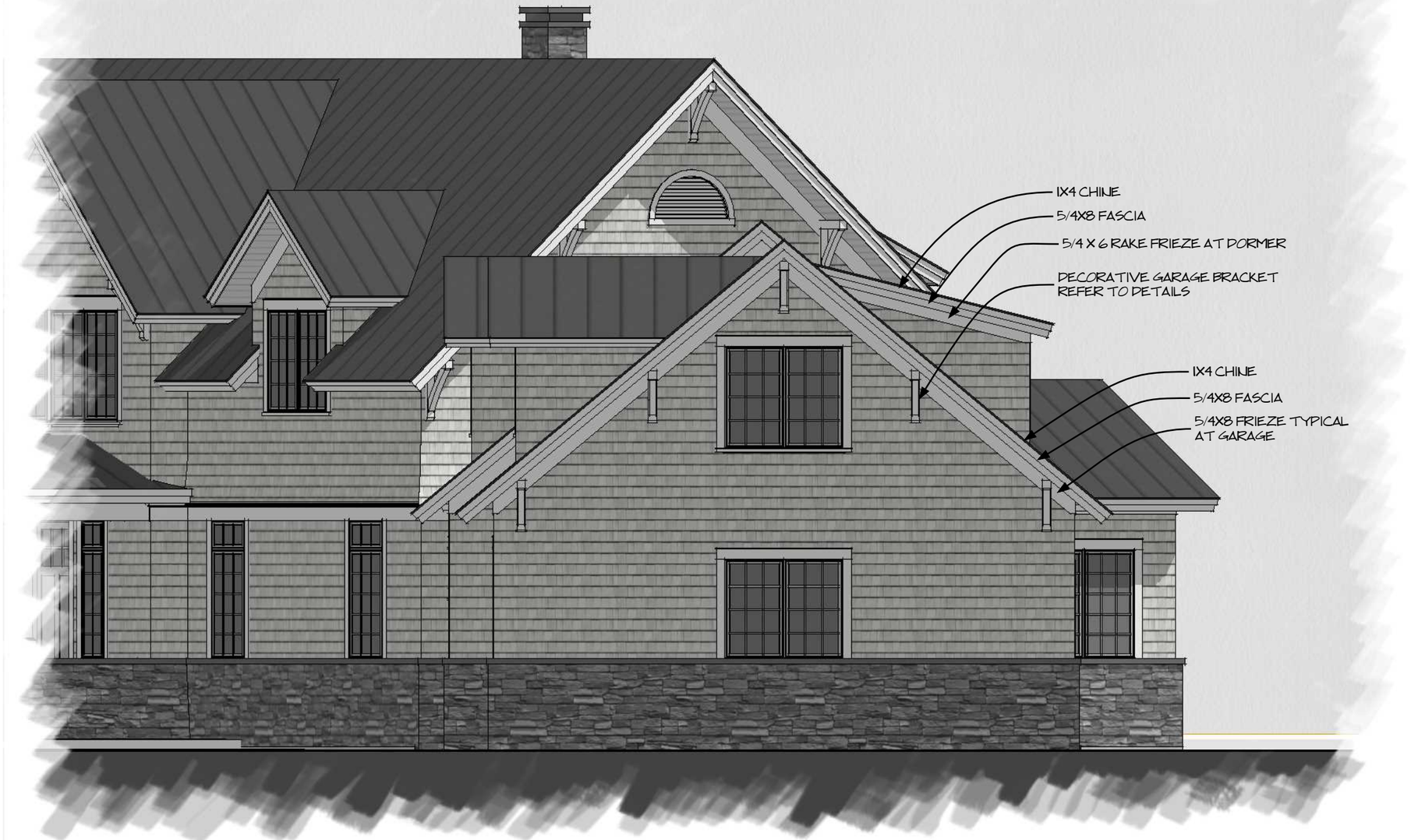

DRAFT VERSION NOT FOR CONSTRUCTION

ENLARGED WEST ELEVATION AT GARAGE

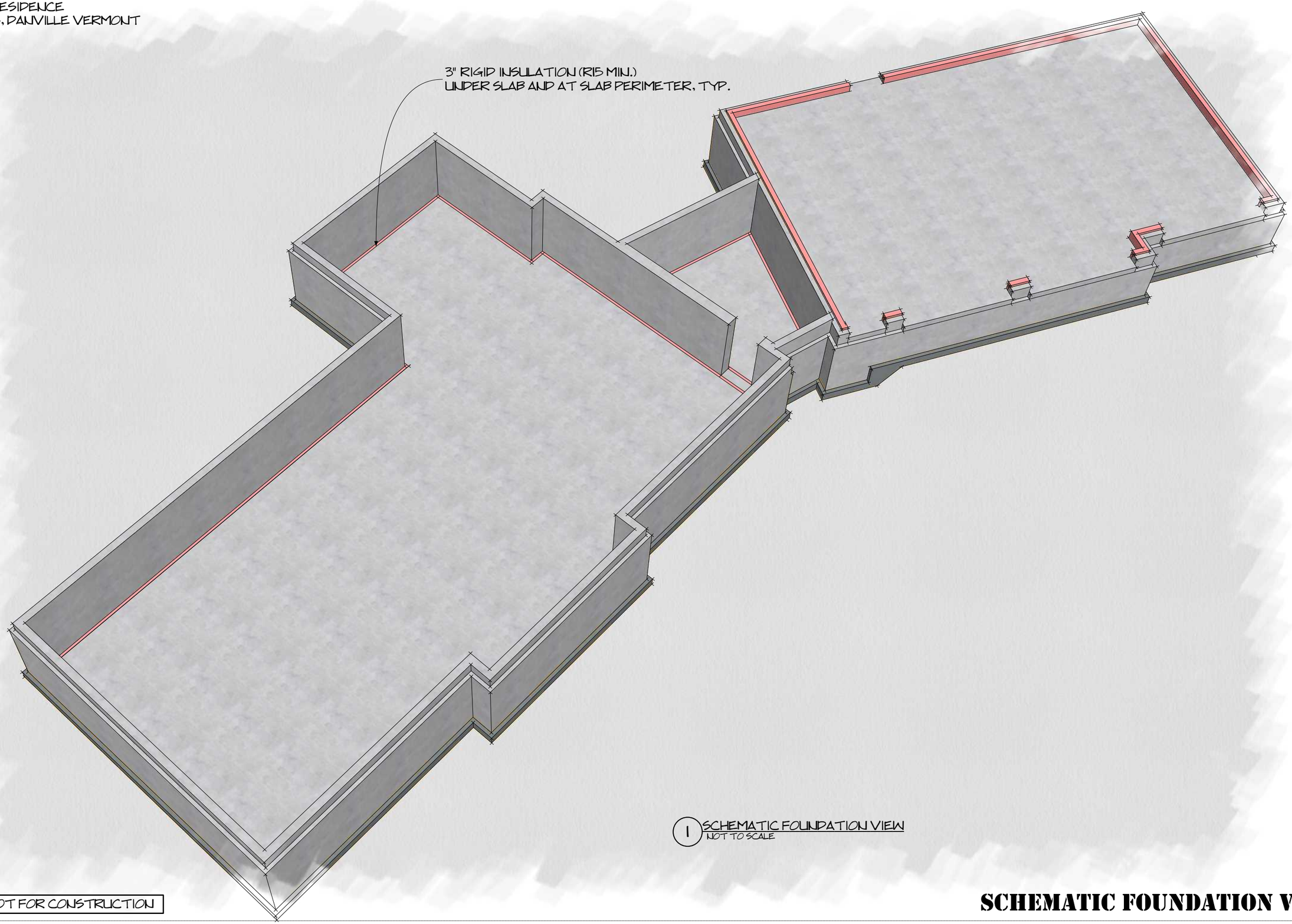

1 SCHEMATIC FOUNDATION VIEW
NOT TO SCALE

DRAFT VERSION NOT FOR CONSTRUCTION

SCHEMATIC FOUNDATION VIEW

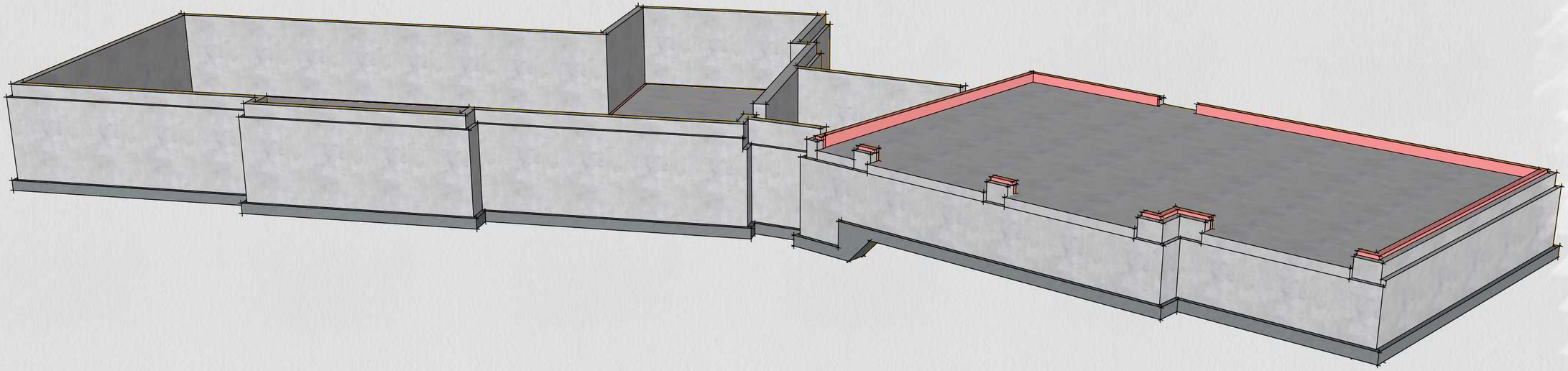

1 SCHEMATIC FOUNDATION VIEW
NOT TO SCALE

DRAFT VERSION NOT FOR CONSTRUCTION

SCHEMATIC FOUNDATION VIEW

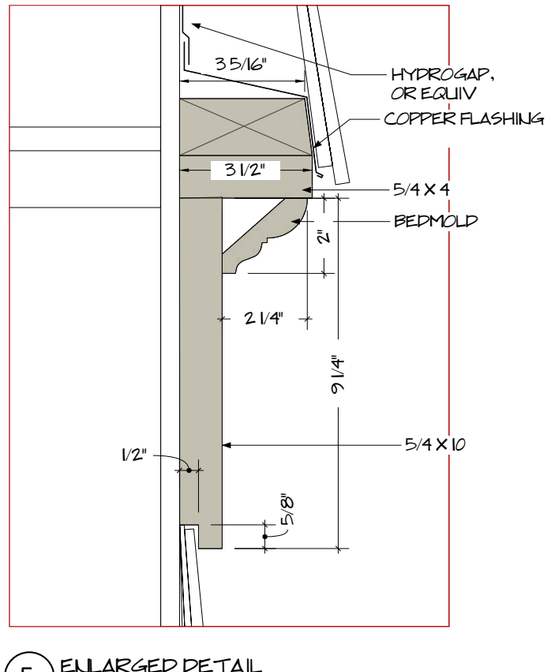

5 ENLARGED DETAIL
SCALE: 3" = 1'-0"

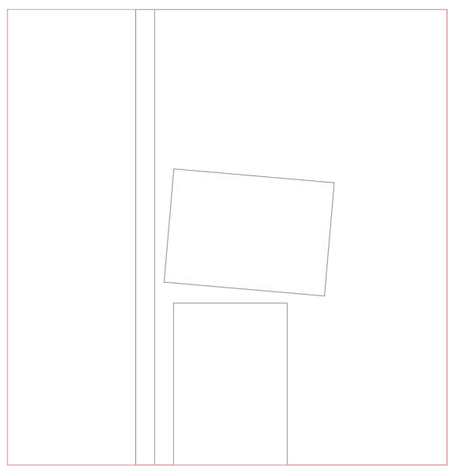

4 DETAIL AT STONE SILL
SCALE: 3" = 1'-0"

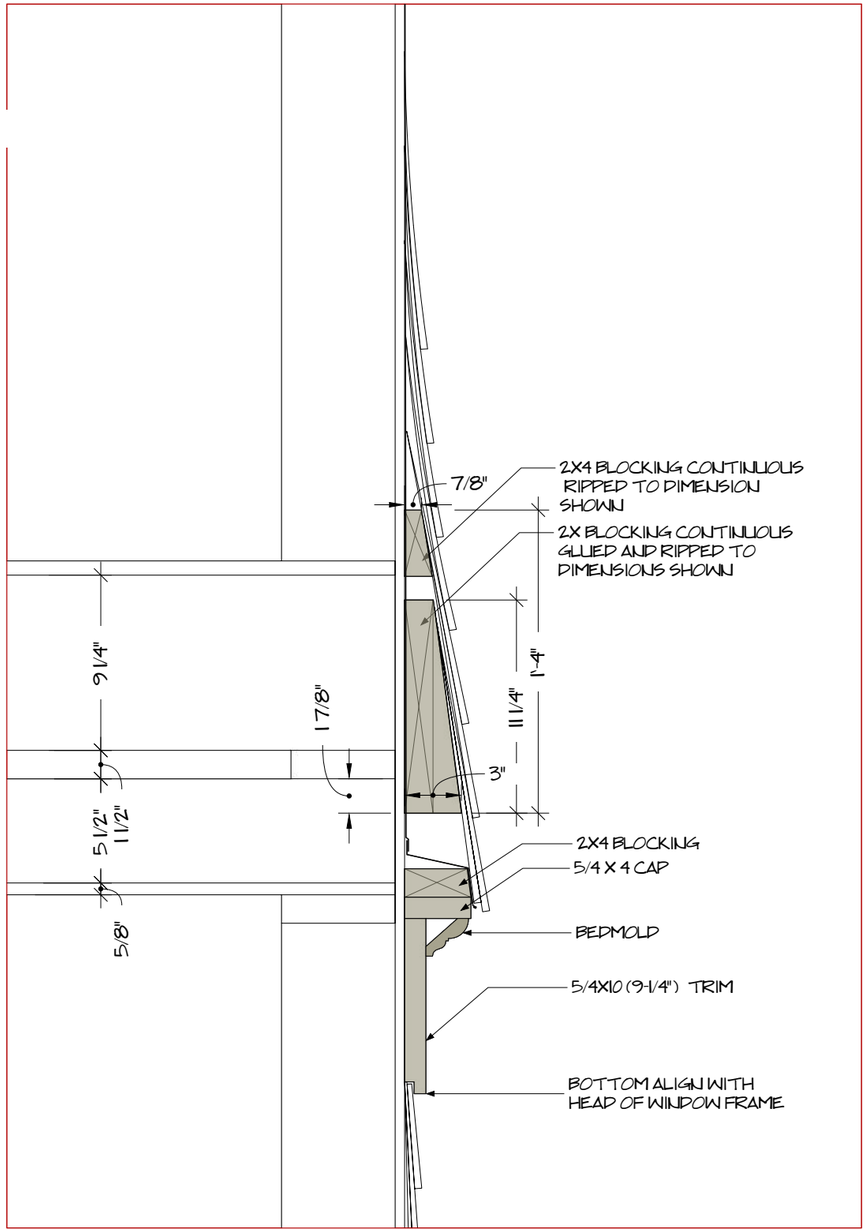

3 DETAIL AT SHINGLE FLARE
SCALE: 1-1/2" = 1'-0"

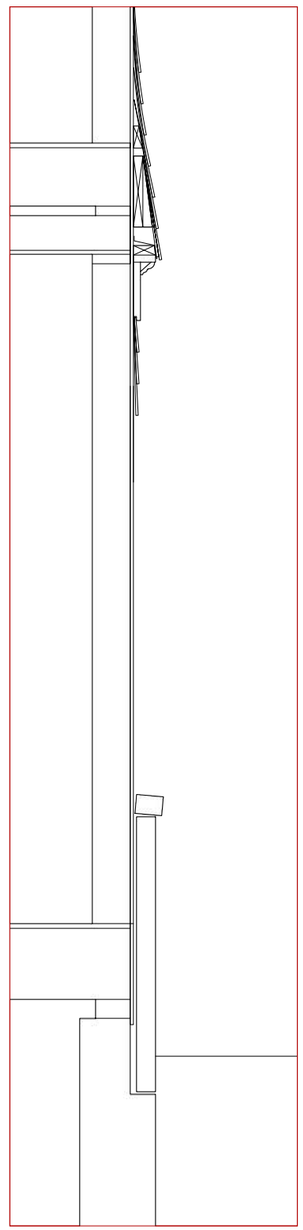

2 PARTIAL WALL SECTION
SCALE: 1/2" = 1'-0"

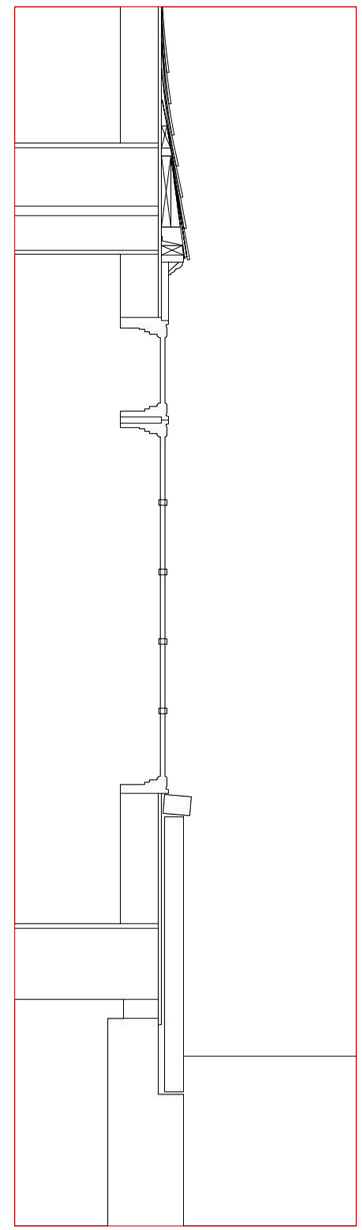

1 PARTIAL WALL SECTION
SCALE: 1/2" = 1'-0"

DRAFT VERSION NOT FOR CONSTRUCTION

DETAILS

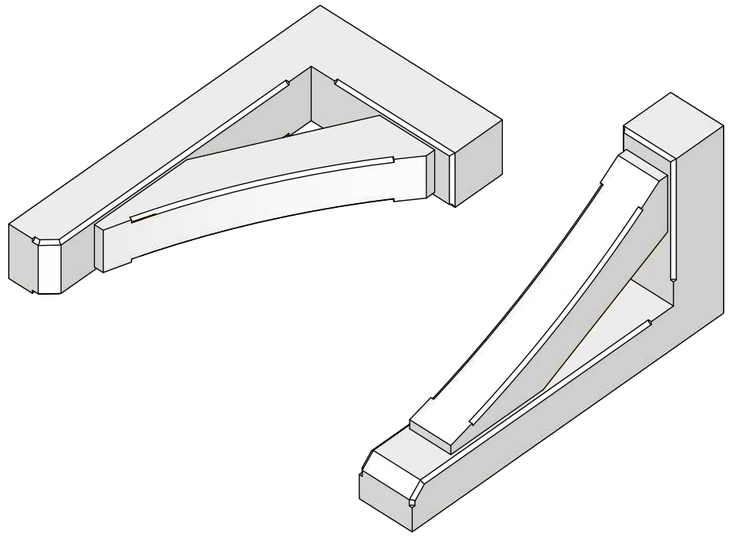

2 GARAGE DECORATIVE BRACKET
SCALE: 1-1/2" = 1'-0"

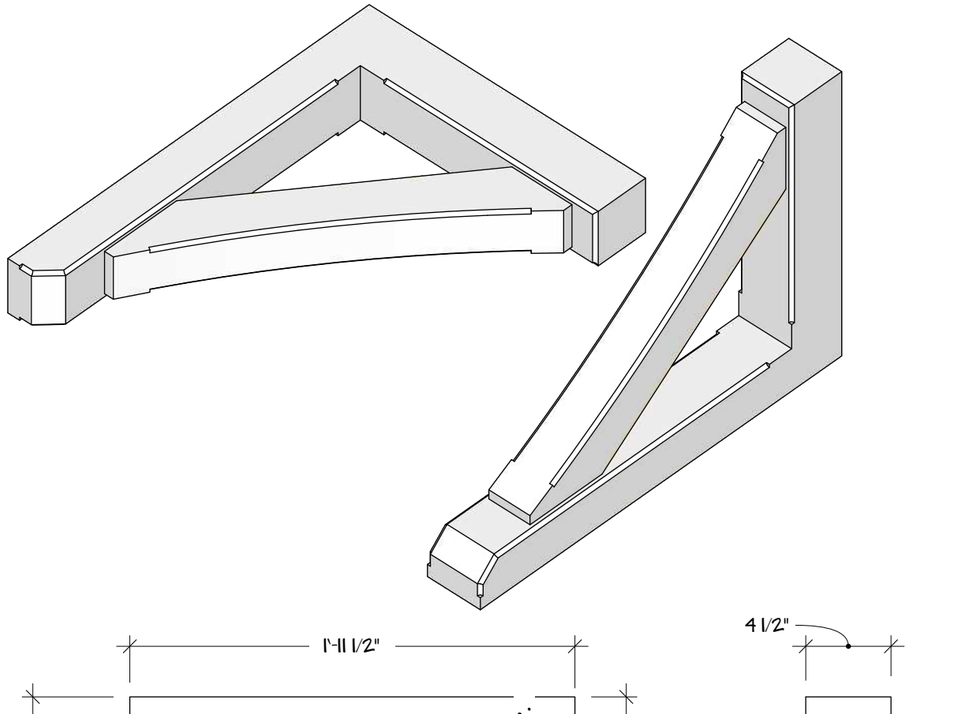

1 HOUSE DECORATIVE BRACKET
SCALE: 1-1/2" = 1'-0"

DRAFT VERSION NOT FOR CONSTRUCTION

DETAILS

1 NORTHWEST MODEL VIEW
NOT TO SCALE

DRAFT VERSION NOT FOR CONSTRUCTION

MODEL VIEW

1 NORTHEAST MODEL VIEW
NOT TO SCALE

DRAFT VERSION NOT FOR CONSTRUCTION

MODEL VIEW

1 SOUTHEAST MODEL VIEW
NOT TO SCALE

DRAFT VERSION NOT FOR CONSTRUCTION

MODEL VIEW

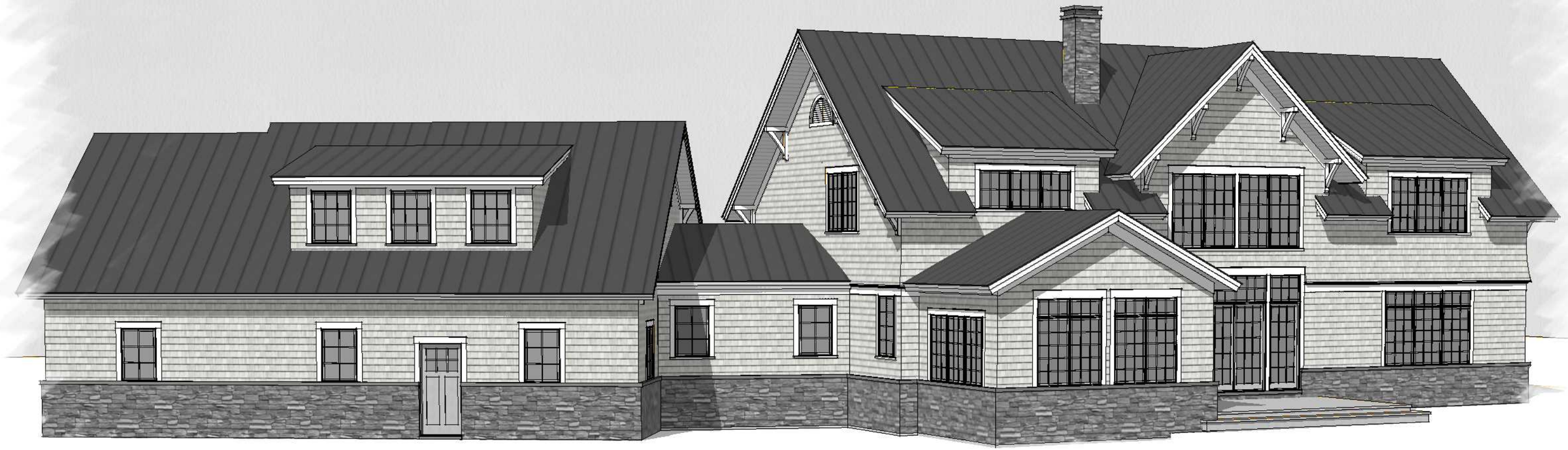

1 SOUTHWEST MODEL VIEW
NOT TO SCALE

DRAFT VERSION NOT FOR CONSTRUCTION

MODEL VIEW